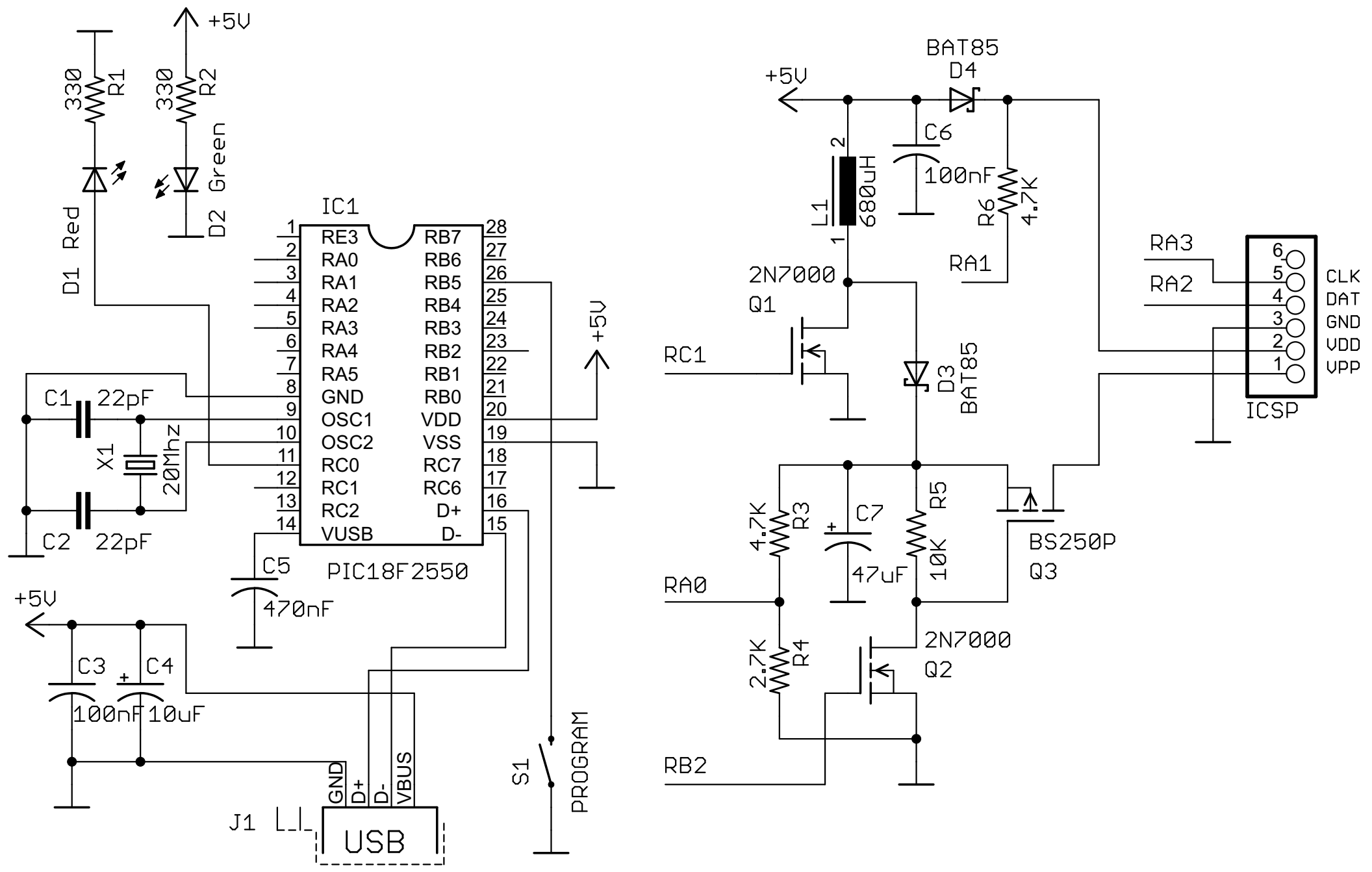
+5V
330
R1
330
R2
D1 Red
D2 Green
IC1
RE3
RA0
RA1
RA2
RA3
RA4
RA5
GND
OSC1
OSC2
RC0
RC1
RC2
VUSB
RB7
RB6
RB5
RB4
RB3
RB2
RB1
RB0
VDD
VSS
RC7
RC6
D+
D-
PIC18F2550
C1 22pF
C2 22pF
X1
20Mhz
C5
470nF
C3
100nF
C4
10uF
J1
USB
GND
D+
D-
VBUS
S1
PROGRAM
BAT85
D4
C6
100nF
L1
680uH
R6
4.7K
RA1
2N7000
Q1
RC1
D3
BAT85
RA3
RA2
CLK
DAT
GND
VDD
VPP
ICSP
R3
4.7K
C7
47uF
R5
10K
BS250P
Q3
RA0
R4
2.7K
2N7000
Q2
RB2